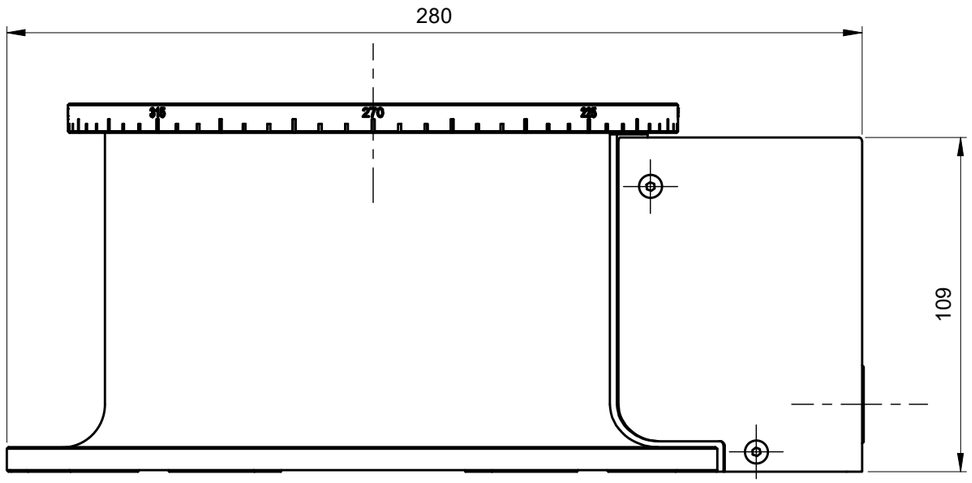

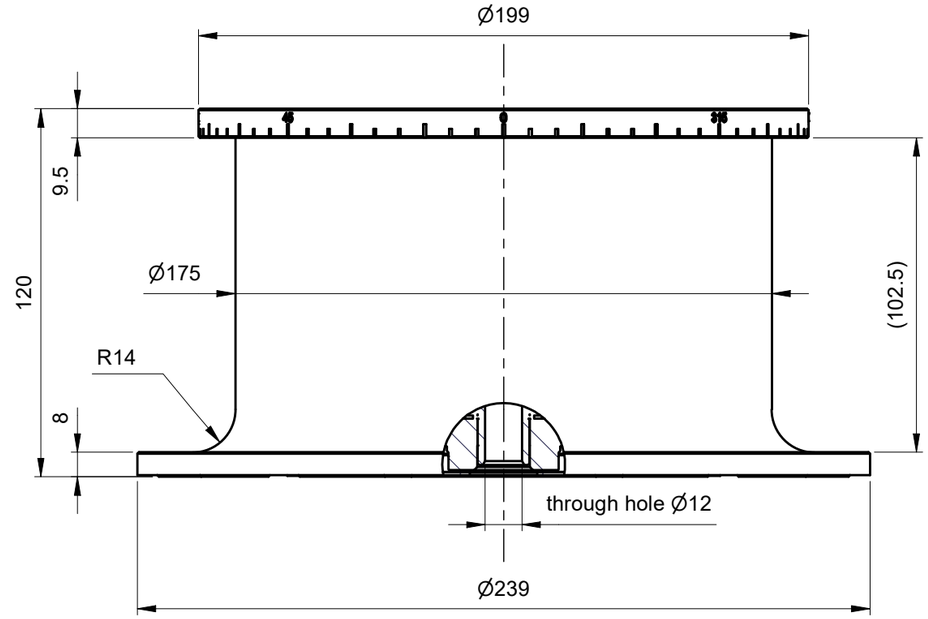

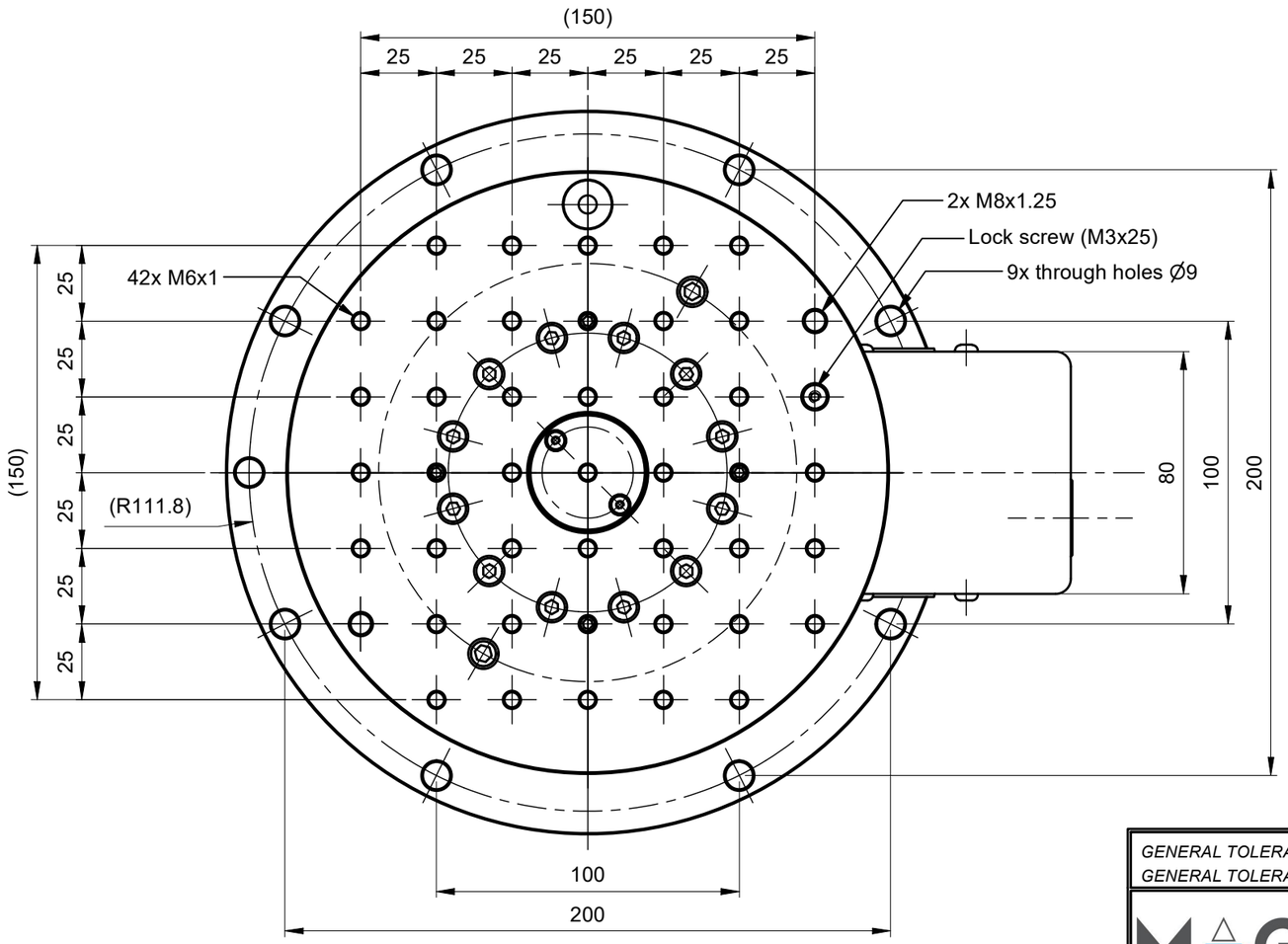

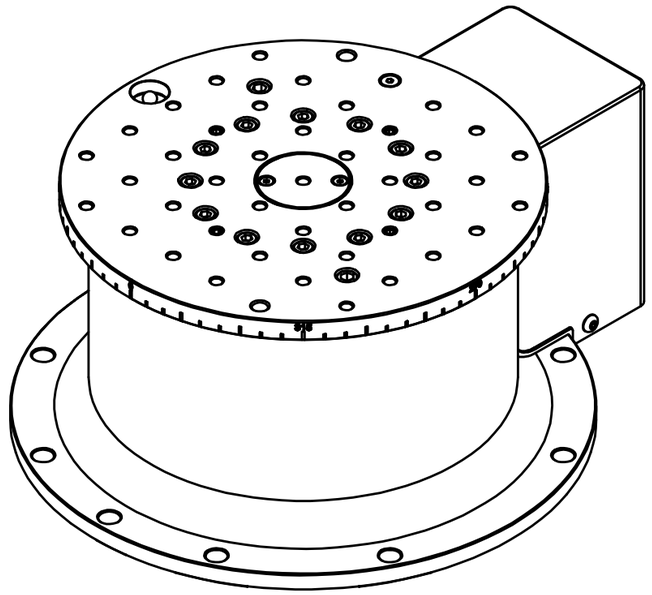

GENERAL TOLERANCES - FOR FEATURES WITHOUT SPECIFIC TOLLERANCE INDICATION ACCORDING TO **ISO 2768 - mH**
GENERAL TOLERANCES FOR THREADS **ISO 965-1 GAS ISO 228/1**

MAGER® AIR BEARINGS

TGV200-H012_TavolaGirevoleMeccanicaTGV200

RELEASE DATE	CODE	RELEASE	MEAS.UNIT	MASS	SCALE
22/04/2025	WF21300001100	A	[mm] [kg]	13.5	1:2

This drawing contains information which are property of Mager srl.
Any total or partial reproduction, disclosure, copy or use of this drawing or the information contained herein is expressly prohibited without prior written permission from Mager srl.
MAGER reserves also the right to change or update his products at its sole discretion at any time and without further notice.